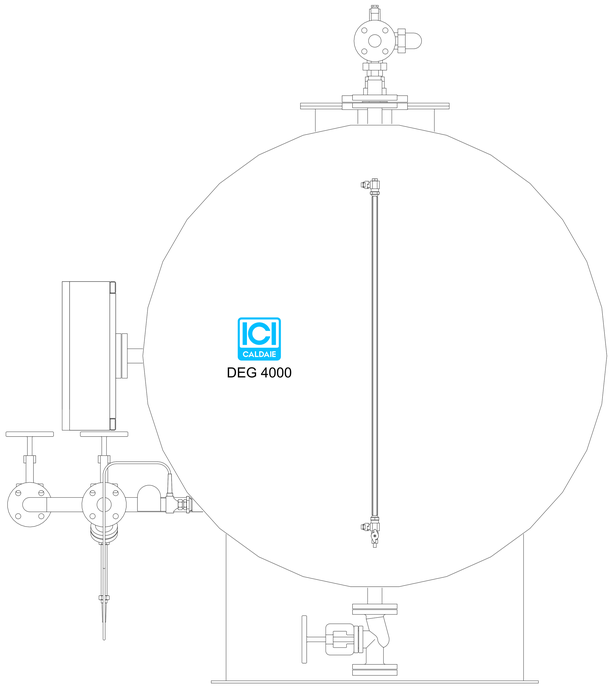

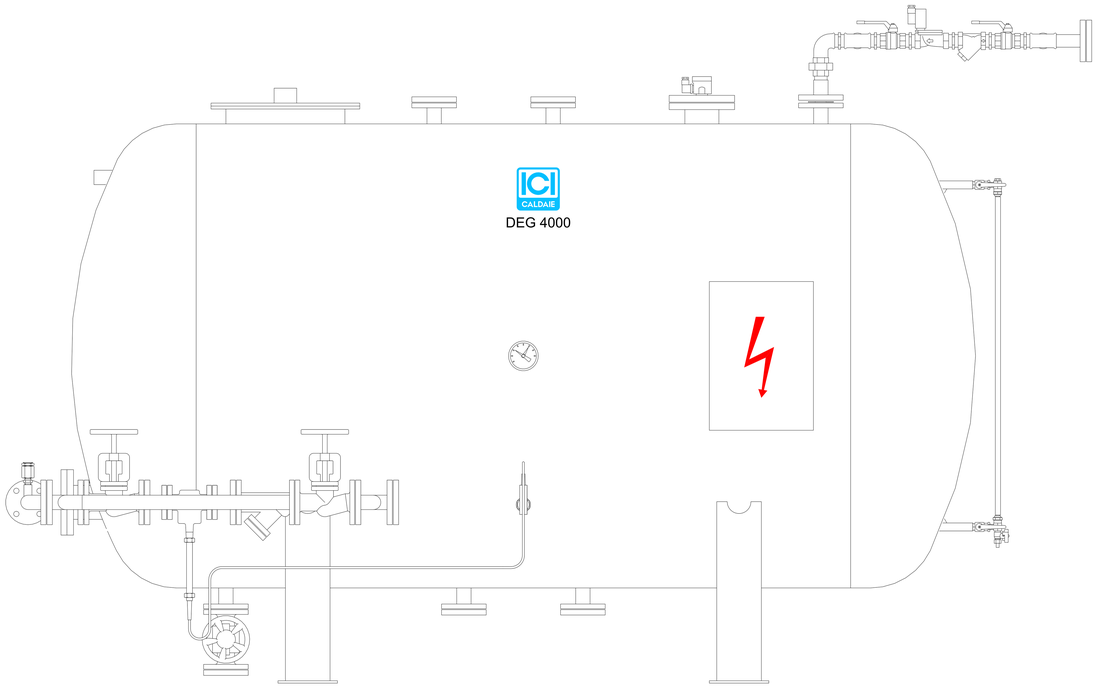

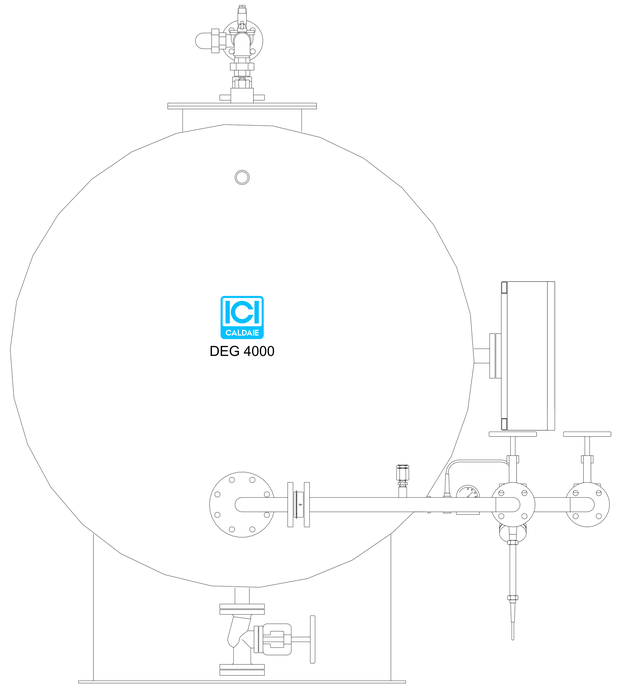

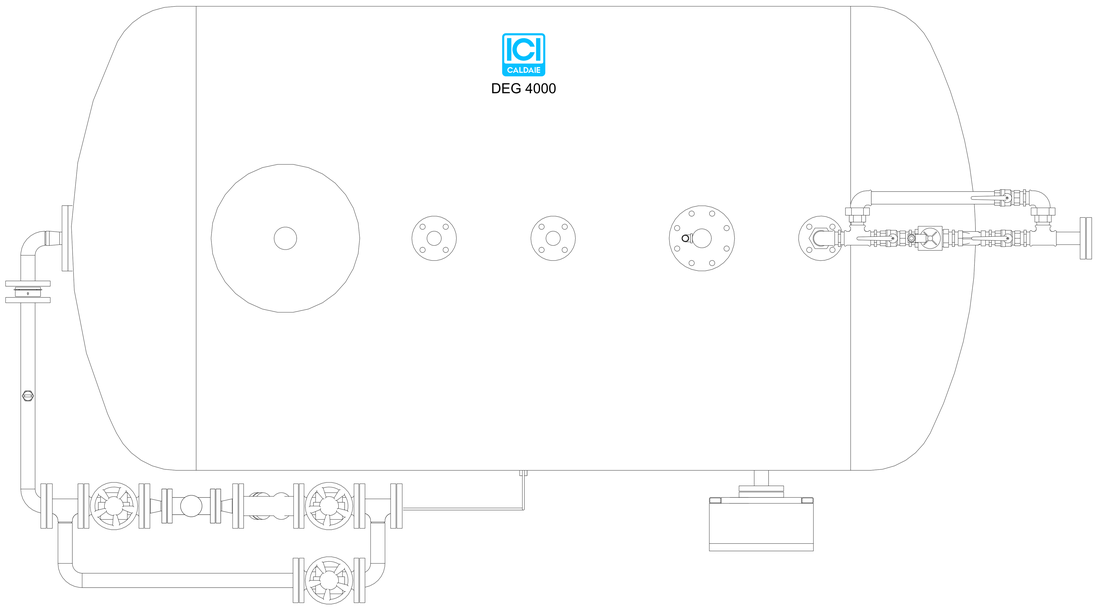

CALDAIE	CODE	DRAWING NUMBER	REV.
	NAME		SCALE